Work Order ID 91417

October-10-12 9:04:41 AM

91417

Item ID: D4541-3

Revision ID:

Item Name: Bracket

Accept *N900040100*

Setup Start *NS1*

Stop *NS2*

Start Date: 10/10/2012 **Start Qty:** 30.00 *30*

Required Date: 09/11/2012 **Req'd Qty:** 30.00 *30*

Reference:

Cust Item ID:

Customer:

Approvals: **Process Plan:** ML5 **Date:** 12-10-10 **Tooling:** **Date:**

QC: **Date:** **SPC (Y/N):** **Date:**

Run Start *NR1*

Stop *NR2*

Sequence ID/ Work Center ID	Operation Description	Set Up/ Run Hours	Tool ID	Tool #	Plan Code	Accept Qty	Reject Qty	Reject Number	Insp. Stamp
Draw Nbr	**Revision Nbr**								
D4541	C								
100		0.00							
100 Waterjet	**Memo**	0.00				30		IB12-10-17	
FLOW CNC Waterjet 6061.032	1- Cut as per dwg Prog rev: C Dwg rev: C 2- Deburr								
110	QC2- Inspect parts off machine FAI/FAIB	0.00							
110 QC Quality Control	**Memo**	0.00				30		IB12-10-17	

DQA: _____ Date: _____

NCR: Yes / No

WORK ORDER NON-CONFORMANCE / UPDATE

QA Closed: Date:

Work Order: _____

Part No. _____

NCR No. _____

DISPOSITION

- Rework ☐
- Scrap ☐
- Use-as-is ☐
- Work Order Update ☐

AGAINST DEPARTMENT/PROCESS

Skid-tube ☐	Crosstube ☐	Water Jet ☐	Engineering ☐
Machining ☐	Small Fab ☐	Prod. Eng. Coor. ☐	Quality ☐
Thermoforming ☐	Finishing ☐	Rec/Store/Packaging ☐	Other ☐
Large Fab ☐	Composite ☐	Supplier ☐	☐

Root Cause		Date	Step	Qty	Description of work order update or Non-conformance	Initial Chief Eng	Action Description	Sign & Date	Verification	QC Inspector
Doc/Data	☐									
Equip/Tooling	☐									
Operator	☐									
Material	☐									
Setup	☐									
Other	☐									
Process	☐									
Supplier	☐									
Training	☐									
Unapproved	☐									

FAULT CATEGORY

Landing Gear

- ☐ Bending
- ☐ Centre Not Concentric to O/S
- ☐ Cracks
- ☐ Crushed/Crimped
- ☐ Cuffs
- ☐ Heat Treat
- ☐ Inspection Strip in Tube
- ☐ Ripples in Bend
- ☐ Torque Waves in Extrusion
- ☐ Turning Sequence
- ☐ Wave/Twist in Tube

General

- ☐ Bend
- ☐ BOM/Route
- ☐ Broken/Damaged
- ☐ Burrs
- ☐ Contamination
- ☐ Countersink
- ☐ Cut Too Short
- ☐ Drill Holes
- ☐ Drawing
- ☐ Finish
- ☐ Folio
- ☐ Grain
- ☐ Hardware
- ☐ Inspection Incomplete
- ☐ Instructions Incomplete/Unclear
- ☐ Maintenance
- ☐ Mislabeled
- ☐ Misread
- ☐ Offset
- ☐ Out of Calibration
- ☐ Out of Sequence
- ☐ Outside Dimensions
- ☐ Ovalized
- ☐ Over/Under tolerance
- ☐ Part Incorrect
- ☐ Part Lost/Missing
- ☐ Part Moved
- ☐ Positioned Wrong
- ☐ Power Loss/Surge
- ☐ Pressure/Forced
- ☐ Temperature/Cure
- ☐ Weld
- ☐ Wrong Stock Pulled
- ☐ Other _____

Work Order ID 91417
October-10-12 9:04:41 AM

91417

Item ID: D4541-3
Revision ID:
Item Name: Bracket

Accept *N900040100*

Setup **Start** *NS1*
Stop *NS2*

Start Date: 10/10/2012 **Start Qty:** 30.00 *30*
Required Date: 09/11/2012 **Req'd Qty:** 30.00 *30*
Reference:

Cust Item ID:
Customer:

Approvals: **Process Plan:** **Date:** **Tooling:** **Date:**
QC: **Date:** **SPC (Y/N):** **Date:**

Run **Start** *NR1*
Stop *NR2*

Sequence ID/ Work Center ID	Operation Description	Set Up/ Run Hours	Tool ID	Tool #	Plan Code	Accept Qty	Reject Qty	Reject Number	Insp. Stamp
120 *120* QC Quality Control	QC8- Inspect parts - second check	0.00 SMB 12 10-17				32 Cam			
	Memo	0.00							
150 *150* Packaging Packaging	Identify as per dwg & Stock Location: GA	0.00				30			SB 12/10/18
	Memo	0.00							
160 *160* QC Quality Control	QC21- Final Inspection - Work Order Release	0.00					12/10/22		
	Memo	0.00							

12-10-18

DQA: _____ Date: _____

NCR: Yes / No

WORK ORDER NON-CONFORMANCE / UPDATE

QA Closed: Date:

Work Order: _____

Part No. _____

NCR No. _____

DISPOSITION

- Rework ☐
- Scrap ☐
- Use-as-is ☐
- Work Order Update ☐

AGAINST DEPARTMENT/PROCESS

Skid-tube ☐	Crosstube ☐	Water Jet ☐	Engineering ☐
Machining ☐	Small Fab ☐	Prod. Eng. Coor. ☐	Quality ☐
Thermoforming ☐	Finishing ☐	Rec/Store/Packaging ☐	Other ☐
Large Fab ☐	Composite ☐	Supplier ☐	☐

Root Cause		Date	Step	Qty	Description of work order update or Non-conformance	Initial Chief Eng	Action Description	Sign & Date	Verification	QC Inspector
Doc/Data	☐									
Equip/Tooling	☐									
Operator	☐									
Material	☐									
Setup	☐									
Other	☐									
Process	☐									
Supplier	☐									
Training	☐									
Unapproved	☐									

FAULT CATEGORY

Landing Gear

- ☐ Bending
- ☐ Centre Not Concentric to O/S
- ☐ Cracks
- ☐ Crushed/Crimped.
- ☐ Cuffs
- ☐ Heat Treat
- ☐ Inspection Strip in Tube
- ☐ Ripples in Bend
- ☐ Torque Waves in Extrusion
- ☐ Turning Sequence
- ☐ Wave/Twist in Tube

General

- ☐ Bend
- ☐ BOM/Route
- ☐ Broken/Damaged
- ☐ Burrs
- ☐ Contamination
- ☐ Countersink
- ☐ Cut Too Short
- ☐ Drill Holes
- ☐ Drawing
- ☐ Finish
- ☐ Folio
- ☐ Grain
- ☐ Hardware
- ☐ Inspection Incomplete
- ☐ Instructions Incomplete/Unclear
- ☐ Maintenance
- ☐ Mislabeled
- ☐ Misread
- ☐ Offset
- ☐ Out of Calibration
- ☐ Out of Sequence
- ☐ Outside Dimensions
- ☐ Ovalized
- ☐ Over/Under tolerance
- ☐ Part Incorrect
- ☐ Part Lost/Missing
- ☐ Part Moved
- ☐ Positioned Wrong
- ☐ Power Loss/Surge
- ☐ Pressure/Forced
- ☐ Temperature/Cure
- ☐ Weld
- ☐ Wrong Stock Pulled
- ☐ Other _____

Picklist Print

October-10-12 9:04:44 AM

Work Order ID: 91417

Parent Item: D4541-3

Parent Item Name: Bracket

91417
D4541-3

Start Date: 10/10/2012 **Required Date:** 09/11/2012

Start Qty: 30.00 **Required Qty:** 30.00

Comments: IPP revA 12.01.04 New Issue EC verified by:DD IPP REV:B 12.02.24 as per dwg revb DD verf:EC IPP REV:C 12.05.08 as per dwg revC DD verf:EC

Component Item ID/ Item Name	Replacement Item ID	Mfg/ Purch	Bin Item	Primary Location	Last Location	Route Seq ID	Unit of Measure	Qty on Hand	Qty per Kit	Total Qty	Qty Issued	Date Issued	Status
M6061T6S.032		Purchased	No			100	sf	700.0600	0.633	19.98947	20		
M6061T6S.032									**			B12-10-17	
6061-T6 Sheet 0.032"													

Location	Loc Qty	Loc Code	
MAT021	700.06		
121099	85.97		
122256	40.89		
122737	30.1		
123097	91.1		
123135	96		123135
123137	356		

32

DQA: _____ Date: _____

NCR: Yes / No

WORK ORDER NON-CONFORMANCE / UPDATE

QA Closed: Date:

Work Order: _____

Part No. _____

NCR No. _____

DISPOSITION

- Rework ☐
- Scrap ☐
- Use-as-is ☐
- Work Order Update ☐

AGAINST DEPARTMENT/PROCESS

Skid-tube ☐	Crosstube ☐	Water Jet ☐	Engineering ☐
Machining ☐	Small Fab ☐	Prod. Eng. Coor. ☐	Quality ☐
Thermoforming ☐	Finishing ☐	Rec/Store/Packaging ☐	Other ☐
Large Fab ☐	Composite ☐	Supplier ☐	☐

Root Cause		Date	Step	Qty	Description of work order update or Non-conformance	Initial Chief Eng	Action Description	Sign & Date	Verification	QC Inspector
Doc/Data	☐									
Equip/Tooling	☐									
Operator	☐									
Material	☐									
Setup	☐									
Other	☐									
Process	☐									
Supplier	☐									
Training	☐									
Unapproved	☐									

FAULT CATEGORY

Landing Gear

- ☐ Bending
- ☐ Centre Not Concentric to O/S
- ☐ Cracks
- ☐ Crushed/Crimped
- ☐ Cuffs
- ☐ Heat Treat
- ☐ Inspection Strip in Tube
- ☐ Ripples in Bend
- ☐ Torque Waves in Extrusion
- ☐ Turning Sequence
- ☐ Wave/Twist in Tube

General

- ☐ Bend
- ☐ BOM/Route
- ☐ Broken/Damaged
- ☐ Burrs
- ☐ Contamination
- ☐ Countersink
- ☐ Cut Too Short
- ☐ Drill Holes
- ☐ Drawing
- ☐ Finish
- ☐ Folio
- ☐ Grain
- ☐ Hardware
- ☐ Inspection Incomplete
- ☐ Instructions Incomplete/Unclear
- ☐ Maintenance
- ☐ Mislabeled
- ☐ Misread
- ☐ Offset
- ☐ Out of Calibration
- ☐ Out of Sequence
- ☐ Outside Dimensions
- ☐ Ovalized
- ☐ Over/Under tolerance
- ☐ Part Incorrect
- ☐ Part Lost/Missing
- ☐ Part Moved
- ☐ Positioned Wrong
- ☐ Power Loss/Surge
- ☐ Pressure/Forced
- ☐ Temperature/Cure
- ☐ Weld
- ☐ Wrong Stock Pulled
- ☐ Other _____

DART AEROSPACE LTD	Work Order:	91417
Description: Bracket	Part Number:	D4541-3
Inspection Dwg: D4541 **Rev:** C		Page 1 of 1

FIRST ARTICLE INSPECTION CHECKLIST

Drawing Dimension	Tolerance	Actual Dimension	Accept	Reject	Method of Inspection	Comments
Ø0.098	+0.004/-0.001	.106	2		V IB02	
Ø0.257	+0.006/-0.001	.260	2		V	
1.00	+/-0.030	.998	2		V	
0.688	+/-0.010	.690	2		V	
0.344	+/-0.010	.345	2		V	
0.70	+/-0.030	.701	2		V	
1.56	+/-0.030	1.557	2		V	
28.6	+/-0.100	28.6	2		7 IB01	
3.3	+/-0.100	3.3	2		7	
0.032	+/-0.010	.031	2		V	

Measured by:	B	Audited by:	SMB	Preliminary Approval:	
Date:	12-10-17	Date:	12-10-17	Date:	

Rev	Date	Change	Revised by	Approved
A	12.05.15	New Issue	KJ	

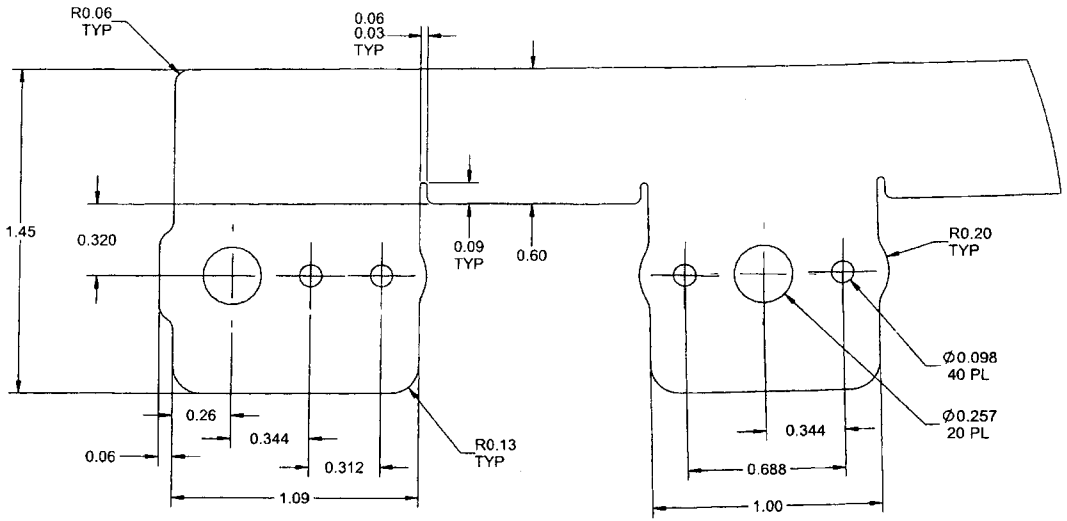

DETAIL A
TYP TAB DETAIL
SCALE 8X

SHOP COPY
RETURN TO
ENGINEERING
UNCONTROLLED COPY
SUBJECT TO AMENDMENT
WITHOUT NOTICE
WORK ORDER
NO. 91417 MLJ
12-10-10

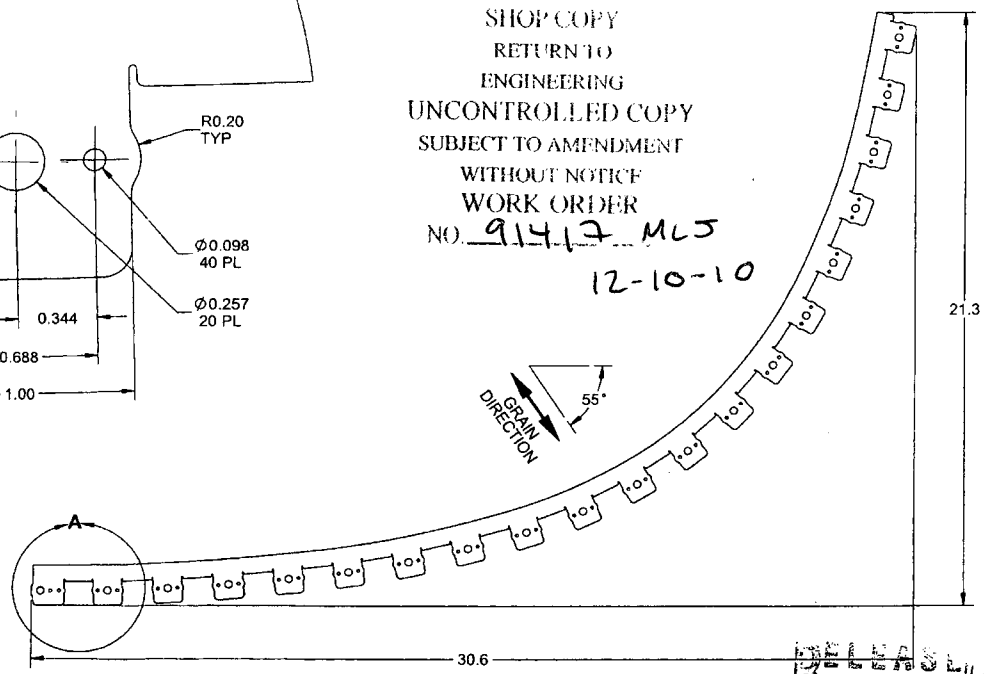

RELEASED
2012 -05- 07

D4541-1 BRACKET

NOTES:
1) MATERIAL: 6061-T6 ALUMINUM SHEET, 0.032 THICK
PER QQ-A-250/11 OR AMS 4025 OR AMS 4027 OR ASTM B209
REF DART SPEC. M6061T6S.032
C 2) FINISH: NONE
3) TOLERANCES: PER DART QSI 018 UNLESS OTHERWISE NOTED
4) UNITS: INCHES UNLESS OTHERWISE NOTED
5) BREAK SHARP EDGES: 0.005 TO 0.010 MAX
6) IDENTIFICATION: NONE
7) WEIGHT: 0.12 lbs
8) PROFILE PER DRAWING FILE "D4541-1-REVC.DXF"

REV.	DESCRIPTION	BY	DATE
C	D4541-5F WAS -5; ADD -5/-6; RMV FINISH (-1/-2/-3/-5F/-7); 0.70 WAS 0.60 (ZN D1-3)	CP	12.04.20
B	-5: 1.55 WAS 1.45 (ZN C4-4)	CP	12.02.01
A	NEW ISSUE	CP	12.01.09

DESIGN		**DART AEROSPACE LTD** HAWKESBURY, ONTARIO, CANADA
DRAWN		
CHECKED	ASS	DRAWING NO. D4541 — REV. C — SHEET 1 OF 7
MFG. APPR.		
APPROVED		TITLE: BRACKET — SCALE: NTS
DE APPR.		
DATE	12.04.20	

COPYRIGHT © 2012 BY DART AEROSPACE LTD
THIS DOCUMENT IS PRIVATE AND CONFIDENTIAL AND IS SUPPLIED ON THE EXPRESS CONDITION THAT IT IS NOT TO BE USED FOR ANY PURPOSE OR COPIED OR COMMUNICATED TO ANY OTHER PERSON WITHOUT WRITTEN PERMISSION FROM DART AEROSPACE LTD.

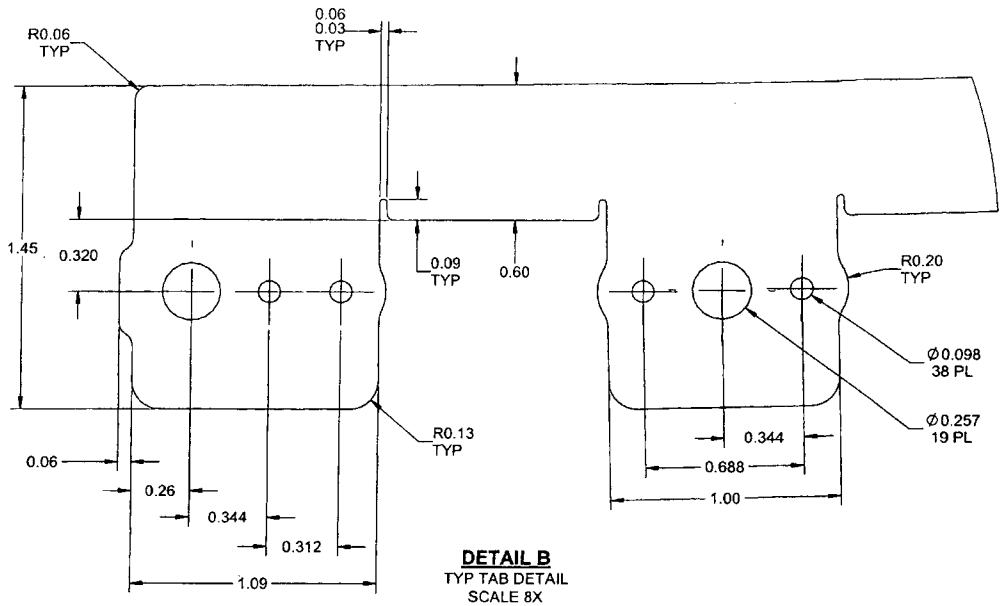

DETAIL B
TYP TAB DETAIL
SCALE 8X

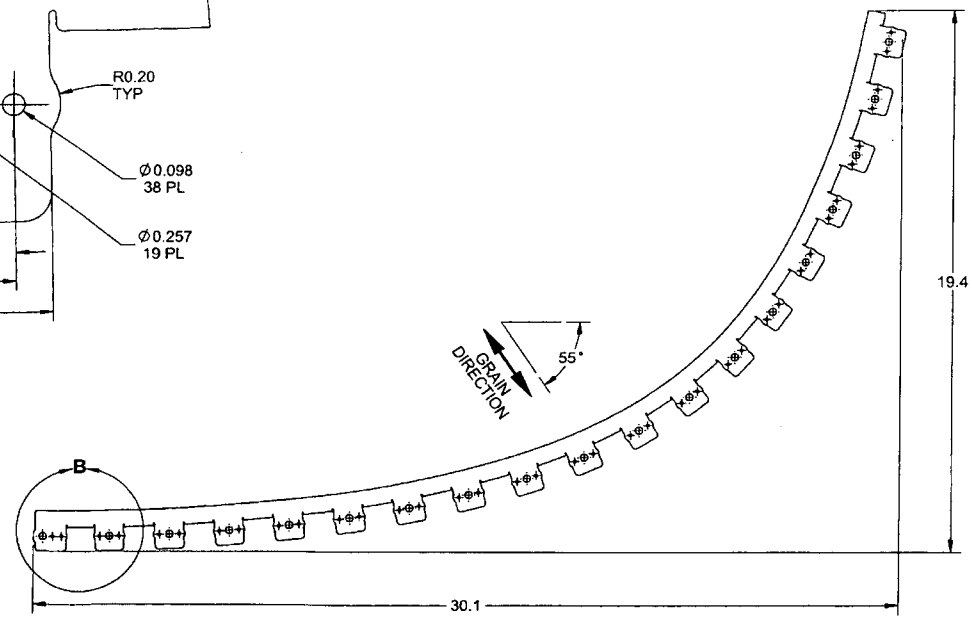

D4541-2 BRACKET

RELEASED
2012 -05- 07

NOTES:
1) MATERIAL: 6061-T6 ALUMINUM SHEET, 0.032 THICK
PER QQ-A-250/11 OR AMS 4025 OR AMS 4027 OR ASTM B209
REF DART SPEC. M6061T6S.032
(C) 2) FINISH: NONE
3) TOLERANCES: PER DART QSI 018 UNLESS OTHERWISE NOTED
4) UNITS: INCHES UNLESS OTHERWISE NOTED
5) BREAK SHARP EDGES: 0.005 TO 0.010 MAX
6) IDENTIFICATION: NONE
7) WEIGHT: 0.12 lbs
8) PROFILE PER DRAWING FILE "D4541-2-REVC.DXF"

DESIGN		DART AEROSPACE LTD HAWKESBURY, ONTARIO, CANADA
DRAWN		
CHECKED		DRAWING NO. D4541 — REV. C — SHEET 2 OF 7
MFG. APPR.		
APPROVED		TITLE BRACKET — SCALE NTS
DE APPR.		
DATE	12.02.20	

COPYRIGHT © 2012 BY DART AEROSPACE LTD
THIS DOCUMENT IS PRIVATE AND CONFIDENTIAL AND IS SUPPLIED ON THE EXPRESS CONDITION THAT IT IS NOT TO BE USED FOR ANY PURPOSE OR COPIED OR COMMUNICATED TO ANY OTHER PERSON WITHOUT WRITTEN PERMISSION FROM DART AEROSPACE LTD.

91417

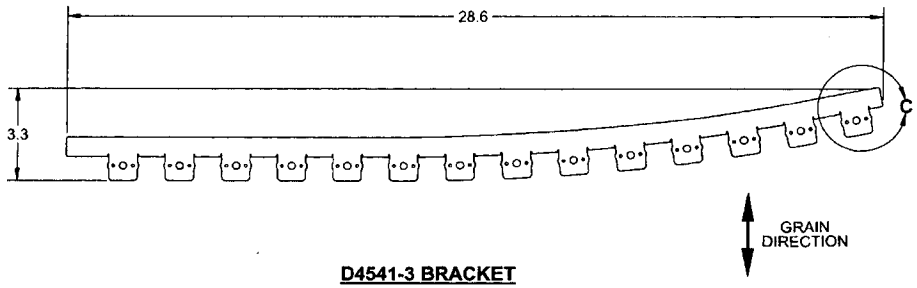

D4541-3 BRACKET

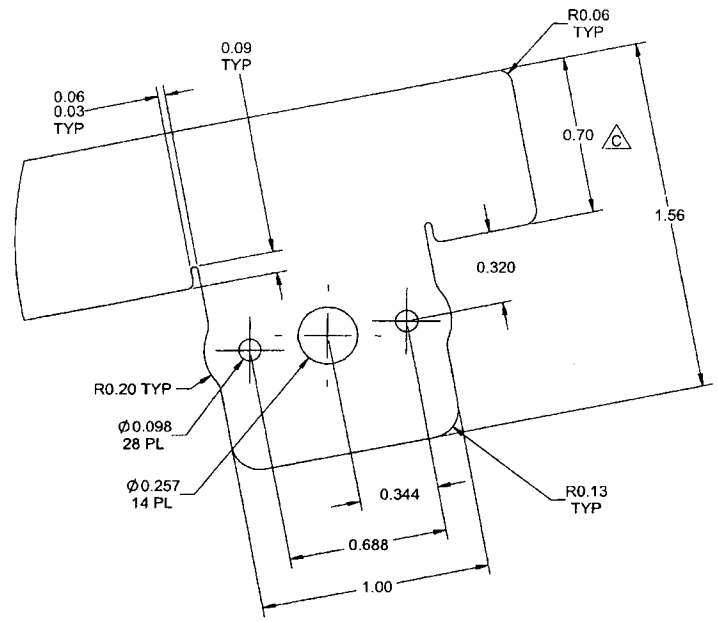

DETAIL C
TYP TAB DETAIL
SCALE 4X

RELEASED
2012 -05- 07

NOTES:
1) MATERIAL: 6061-T6 ALUMINUM SHEET, 0.032 THICK
PER QQ-A-250/11 OR AMS 4025 OR AMS 4027 OR ASTM B209
REF DART SPEC. M6061T6S.032
C 2) FINISH: NONE
3) TOLERANCES: PER DART QSI 018 UNLESS OTHERWISE NOTED
4) UNITS: INCHES UNLESS OTHERWISE NOTED
5) BREAK SHARP EDGES: 0.005 TO 0.015 MAX
6) IDENTIFICATION: NONE
7) WEIGHT: 0.09 lbs
8) PROFILE PER DRAWING FILE "D4541-3-REVC.DXF"

DESIGN		DART AEROSPACE LTD HAWKESBURY, ONTARIO, CANADA
DRAWN		
CHECKED		DRAWING NO. D4541 — REV. C — SHEET 3 OF 7
MFG. APPR.		
APPROVED		TITLE BRACKET — SCALE NTS
DE APPR.		
DATE	12.02.20	

COPYRIGHT © 2012 BY DART AEROSPACE LTD
THIS DOCUMENT IS PRIVATE AND CONFIDENTIAL AND IS SUPPLIED ON THE EXPRESS CONDITION THAT IT IS NOT TO BE USED FOR ANY PURPOSE OR COPIED OR COMMUNICATED TO ANY OTHER PERSON WITHOUT WRITTEN PERMISSION FROM DART AEROSPACE LTD.

91417

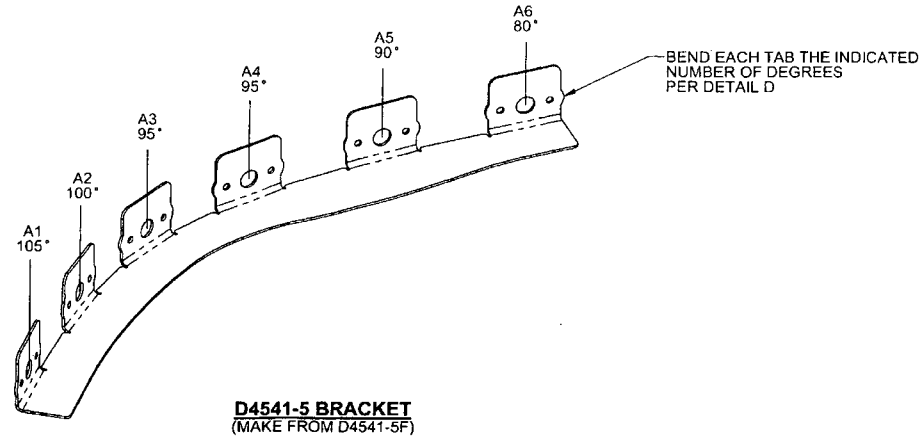

D4541-5 BRACKET
(MAKE FROM D4541-5F)

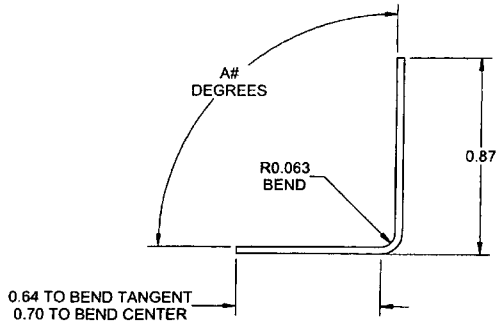

DETAIL D
BEND DETAIL
SCALE 2X

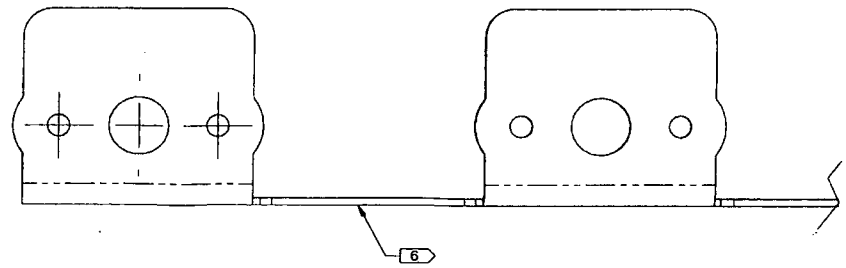

RELEASED
2012 -05- 07

NOTES:
1) MATERIAL: MAKE FROM D4541-5F
2) FINISH:CHEMICAL CONVERSION COAT PER DART QSI 005 4.1
3) TOLERANCES: PER DART QSI 018 UNLESS OTHERWISE NOTED
4) UNITS: INCHES UNLESS OTHERWISE NOTED
5) BREAK SHARP EDGES: N/A
6) IDENTIFICATION: DART P/N & B/N PER DART QSI 044 6.1
7) WEIGHT: 0.04 lbs

DESIGN		**DART AEROSPACE LTD** HAWKESBURY, ONTARIO, CANADA
DRAWN		
CHECKED		DRAWING NO. D4541 — REV. C — SHEET 4 OF 7
MFG. APPR.		
APPROVED		TITLE: BRACKET — SCALE: NTS
DE APPR.		
DATE 12.02.20		

COPYRIGHT © 2012 BY DART AEROSPACE LTD
THIS DOCUMENT IS PRIVATE AND CONFIDENTIAL AND IS SUPPLIED ON THE EXPRESS CONDITION THAT IT IS NOT TO BE USED FOR ANY PURPOSE OR COPIED OR COMMUNICATED TO ANY OTHER PERSON WITHOUT WRITTEN PERMISSION FROM DART AEROSPACE LTD.

91417

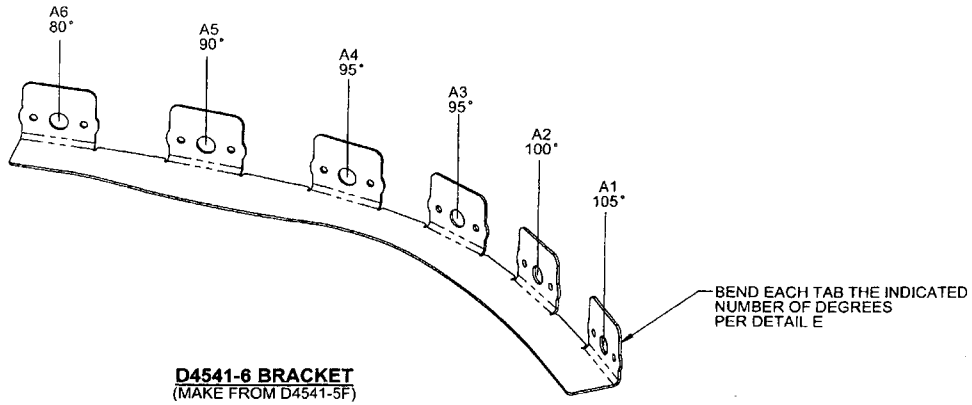

D4541-6 BRACKET
(MAKE FROM D4541-5F)

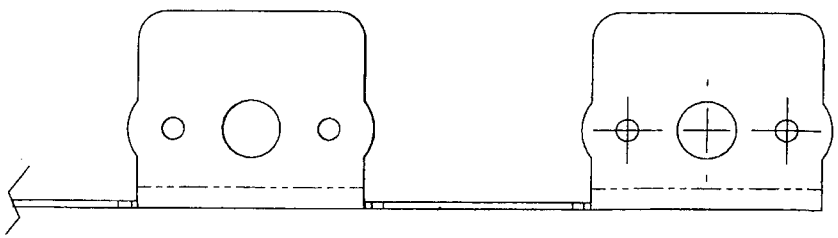

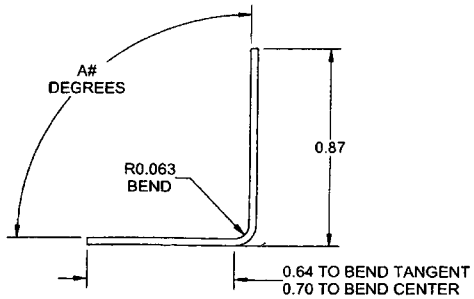

DETAIL E
BEND DETAIL
SCALE 2X

RELEASED
2012 -05- 07

NOTES:
1) MATERIAL: MAKE FROM D4541-5F
2) FINISH:CHEMICAL CONVERSION COAT PER DART QSI 005 4.1
3) TOLERANCES: PER DART QSI 018 UNLESS OTHERWISE NOTED
4) UNITS: INCHES UNLESS OTHERWISE NOTED
5) BREAK SHARP EDGES: N/A
6) IDENTIFICATION: DART P/N & B/N PER DART QSI 044 6.1
7) WEIGHT: 0.04 lbs

DESIGN		**DART AEROSPACE LTD** HAWKESBURY, ONTARIO, CANADA
DRAWN		
CHECKED	ASS	DRAWING NO. D4541 — REV. C — SHEET 5 OF 7
MFG. APPR.		
APPROVED		TITLE BRACKET — SCALE NTS
DE APPR.		
DATE	12.02.20	

COPYRIGHT © 2012 BY DART AEROSPACE LTD
THIS DOCUMENT IS PRIVATE AND CONFIDENTIAL AND IS SUPPLIED ON THE EXPRESS CONDITION THAT IT IS NOT TO BE USED FOR ANY PURPOSE OR COPIED OR COMMUNICATED TO ANY OTHER PERSON WITHOUT WRITTEN PERMISSION FROM DART AEROSPACE LTD.

91417

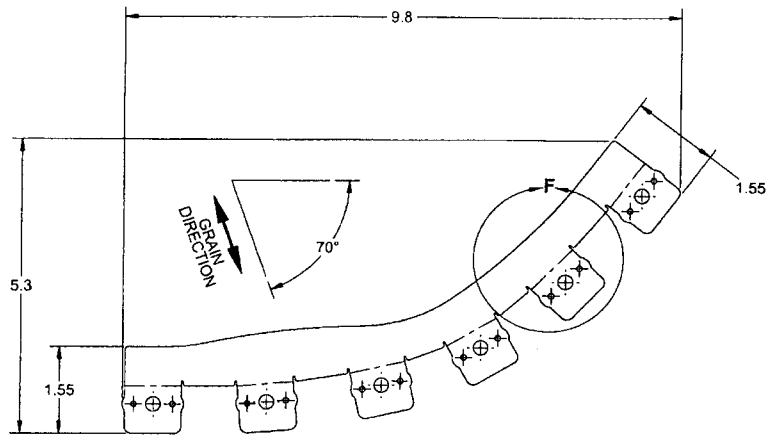

D4541-5F FLAT PATTERN

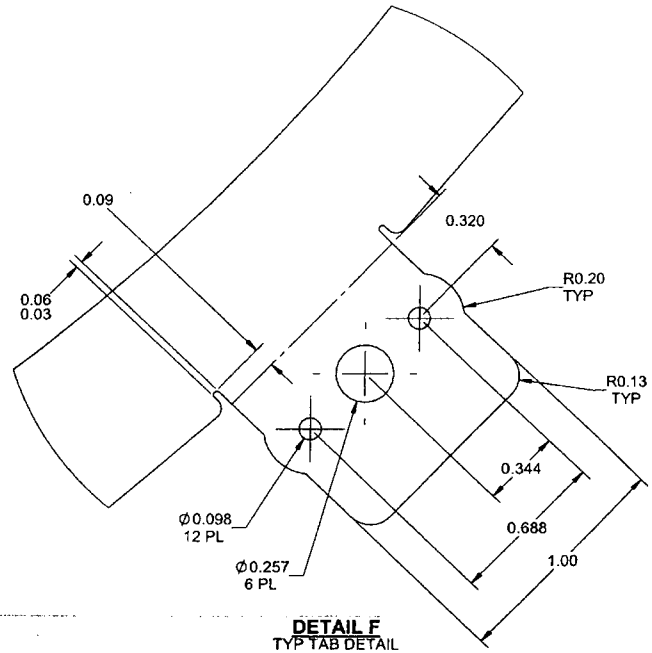

DETAIL F
TYP TAB DETAIL
SCALE 4X

RELEASED
2012 -05- 07

NOTES:
1) MATERIAL: 6061-T6 ALUMINUM SHEET, 0.032 THICK
PER QQ-A-250/11 OR AMS 4025 OR AMS 4027 OR ASTM B209
REF DART SPEC. M6061T6S.032
C 2) FINISH: NONE
3) TOLERANCES: PER DART QSI 018 UNLESS OTHERWISE NOTED
4) UNITS: INCHES UNLESS OTHERWISE NOTED
5) BREAK SHARP EDGES: 0.005 TO 0.015 MAX
6) IDENTIFICATION: NONE
7) WEIGHT: 0.04 lbs
8) PROFILE PER DRAWING FILE "D4541-5-REVC.DXF"

DESIGN		**DART AEROSPACE LTD** HAWKESBURY, ONTARIO, CANADA
DRAWN		
CHECKED		DRAWING NO. D4541 — REV. C — SHEET 6 OF 7
MFG. APPR.		
APPROVED		TITLE: BRACKET — SCALE: NTS
DE APPR.		
DATE 12.04.20		

COPYRIGHT © 2012 BY DART AEROSPACE LTD
THIS DOCUMENT IS PRIVATE AND CONFIDENTIAL AND IS SUPPLIED ON THE EXPRESS CONDITION THAT IT IS NOT TO BE USED FOR ANY PURPOSE OR COPIED OR COMMUNICATED TO ANY OTHER PERSON WITHOUT WRITTEN PERMISSION FROM DART AEROSPACE LTD

91417

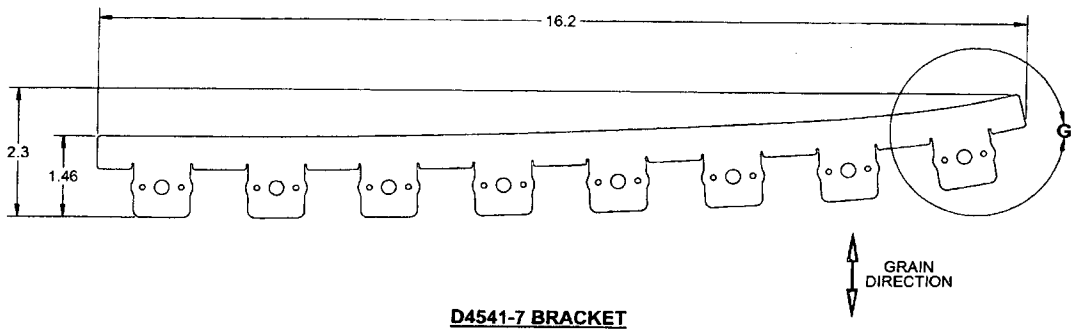

D4541-7 BRACKET

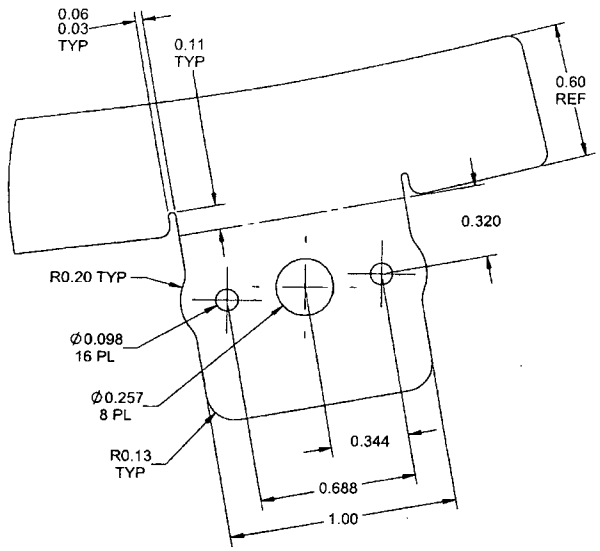

DETAIL G
TYP TAB DETAIL
SCALE 4X

2012 -05- 07

NOTES:
1) MATERIAL: 6061-T6 ALUMINUM SHEET, 0.032 THICK
PER QQ-A-250/11 OR AMS 4025 OR AMS 4027 OR ASTM B209
REF DART SPEC. M6061T6S.032
C 2) FINISH: NONE
3) TOLERANCES: PER DART QSI 018 UNLESS OTHERWISE NOTED
4) UNITS: INCHES UNLESS OTHERWISE NOTED
5) BREAK SHARP EDGES: 0.005 TO 0.015 MAX
6) IDENTIFICATION: NONE
7) WEIGHT: 0.04 lbs
8) PROFILE PER DRAWING FILE "D4541-7-REVC.DXF"

DESIGN		**DART AEROSPACE LTD** HAWKESBURY, ONTARIO, CANADA
DRAWN		
CHECKED	ASS	DRAWING NO. D4541 — REV. C — SHEET 7 OF 7
MFG. APPR.		
APPROVED		TITLE BRACKET — SCALE NTS
DE APPR.		
DATE 12.04.20		

COPYRIGHT © 2012 BY DART AEROSPACE LTD
THIS DOCUMENT IS PRIVATE AND CONFIDENTIAL AND IS SUPPLIED ON THE EXPRESS CONDITION THAT IT IS NOT TO BE USED FOR ANY PURPOSES OR COPIED OR COMMUNICATED TO ANY OTHER PERSON WITHOUT WRITTEN PERMISSION FROM DART AEROSPACE LTD.